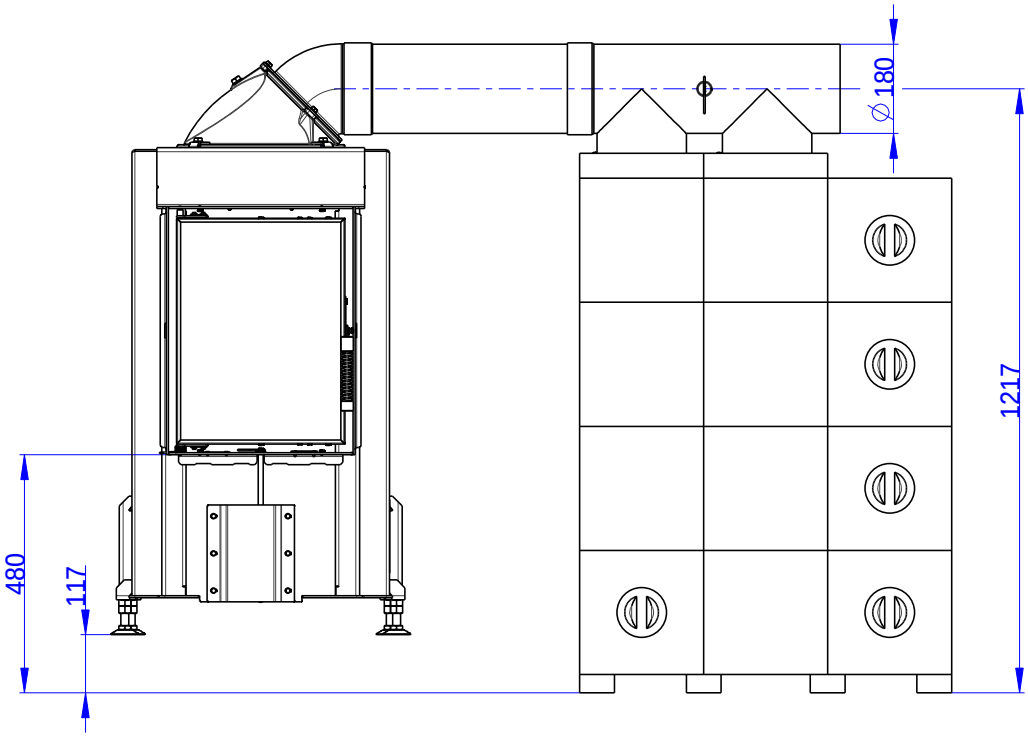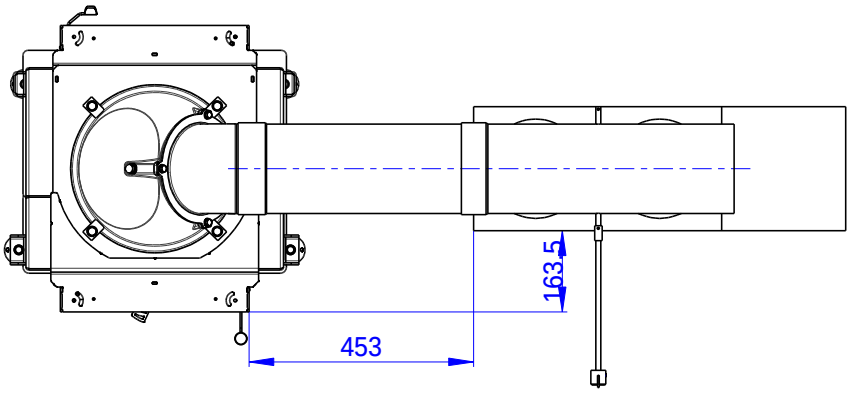# Romotop® Dynamic B 3g 38.50.01A