Rozmery v mm
Maße in mm
Dimensions in mm

Dynamic 3g 66.44.01

226 kg

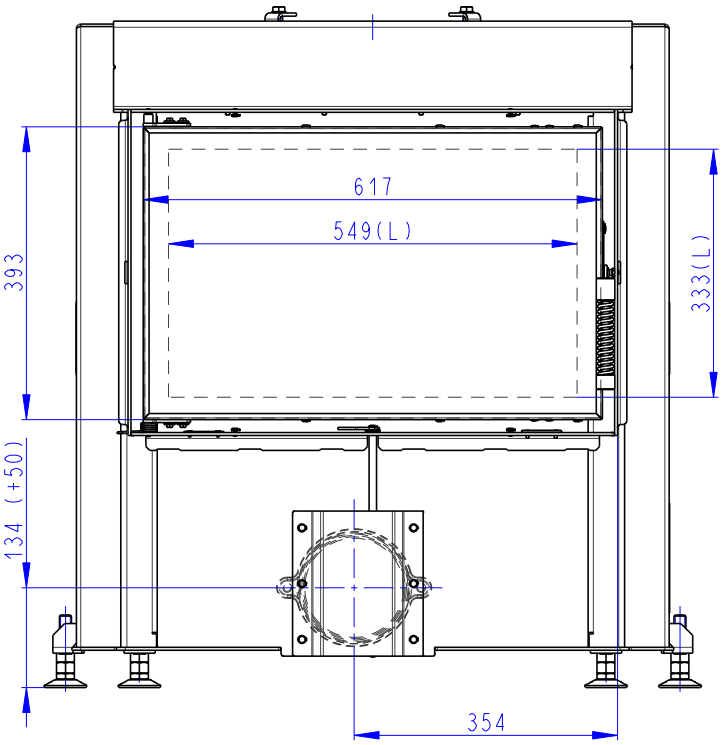

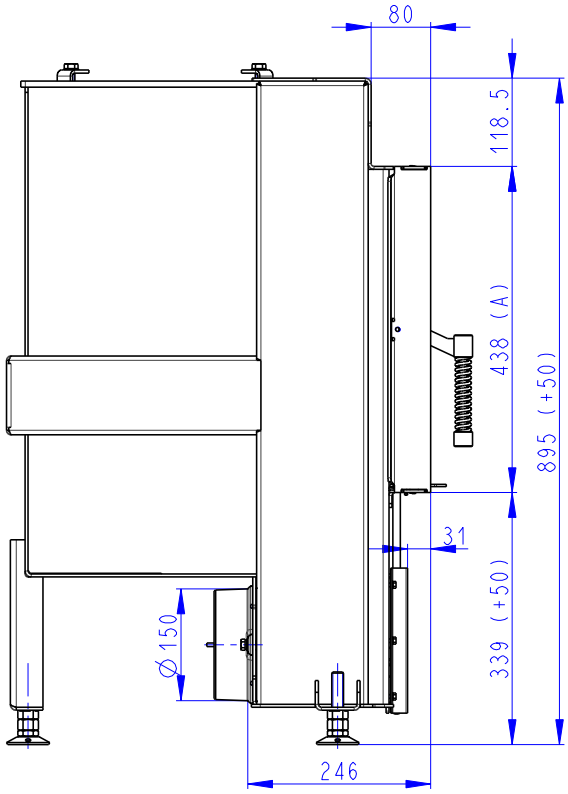

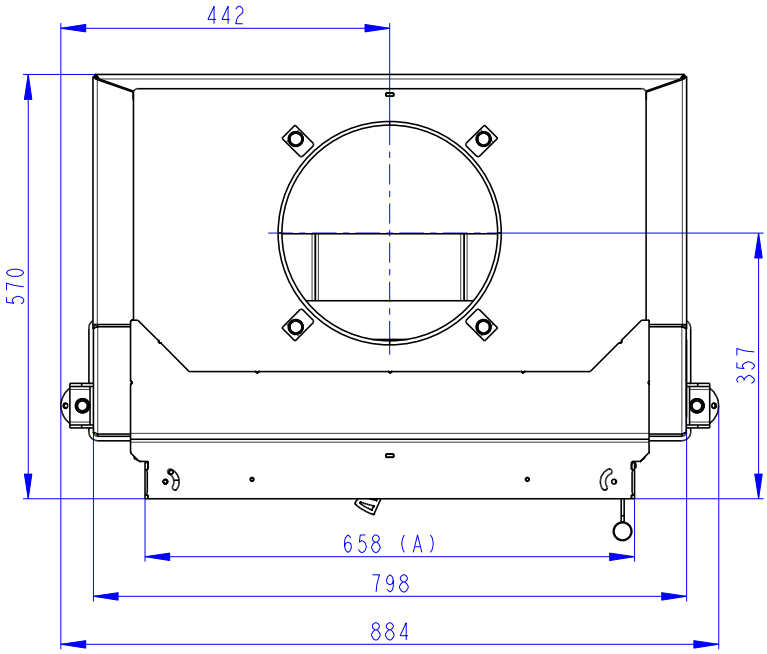

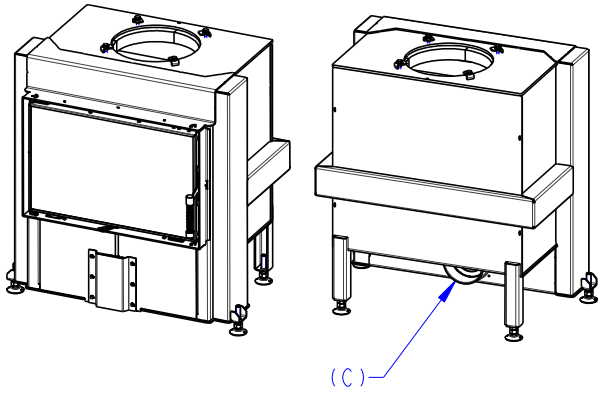

(A) Zastavbovy rozmer / Baumaße / In-built dimension
(C) Centralni privod vzduchu / Central air inlet / Zentralluftzufuhr
(L) Volna plocha proskleni / Free glass area / Freie Glassichtfläche

Rozmery v mm
Maße in mm
Dimensions in mm

Dynamic 3g 66.44.01 + D3 KPL 180

240 kg

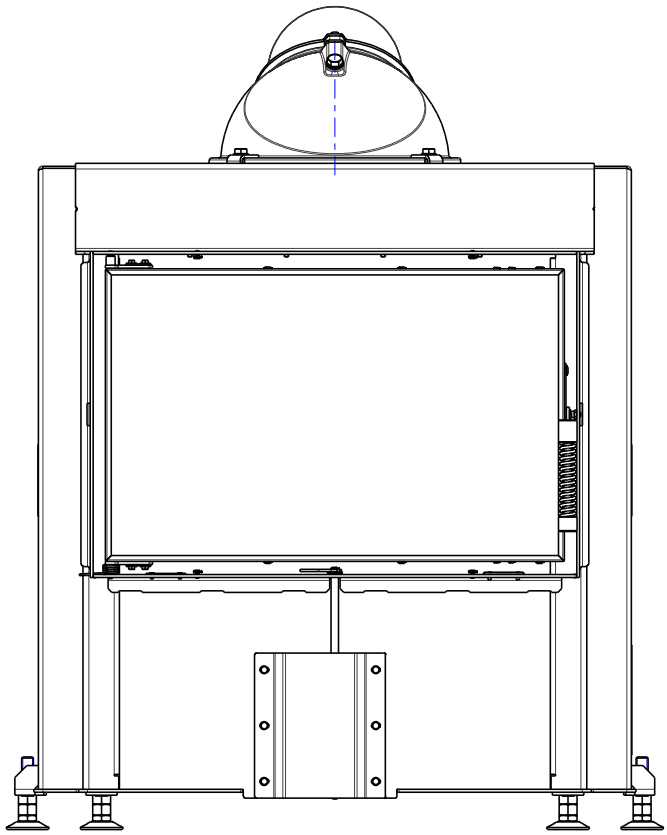

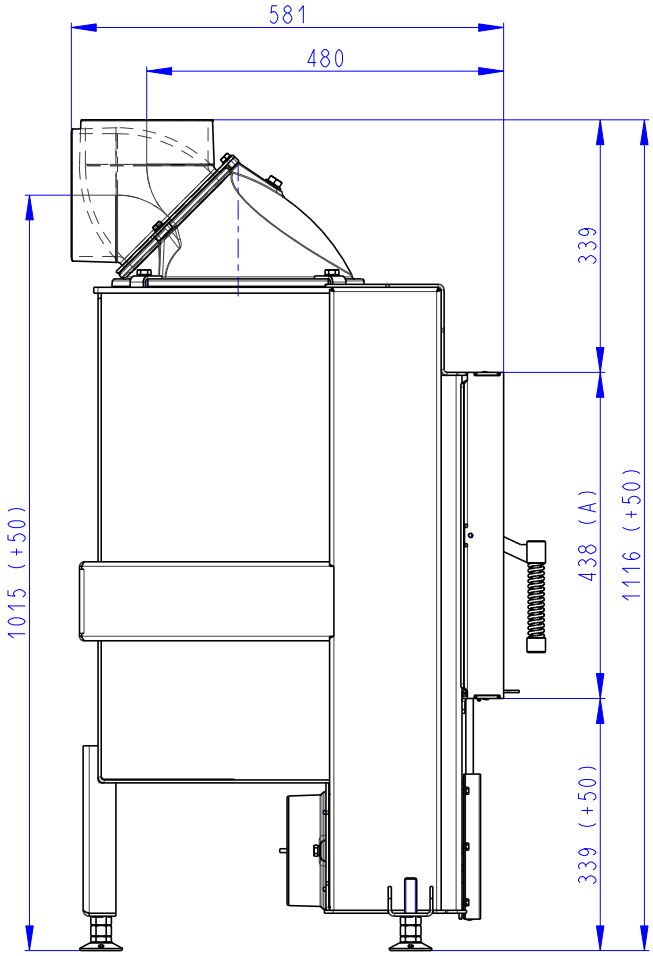

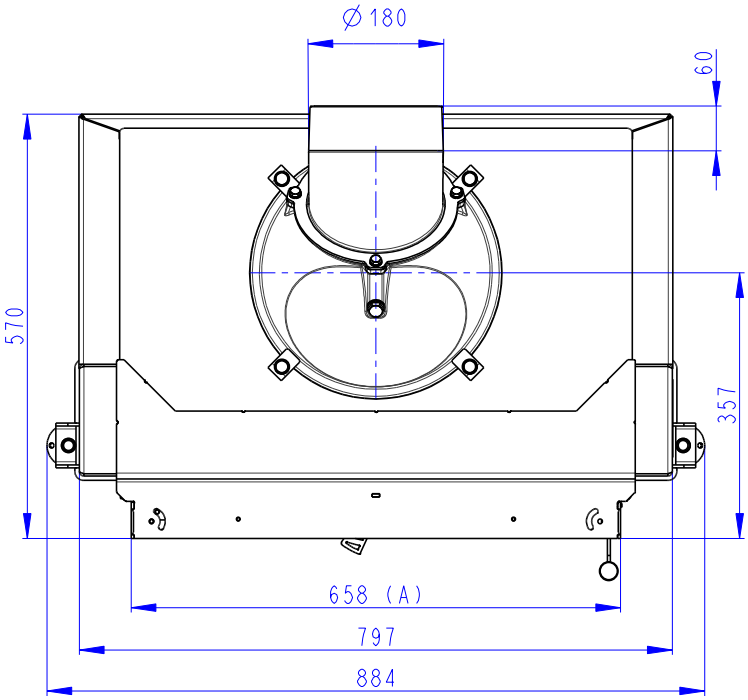

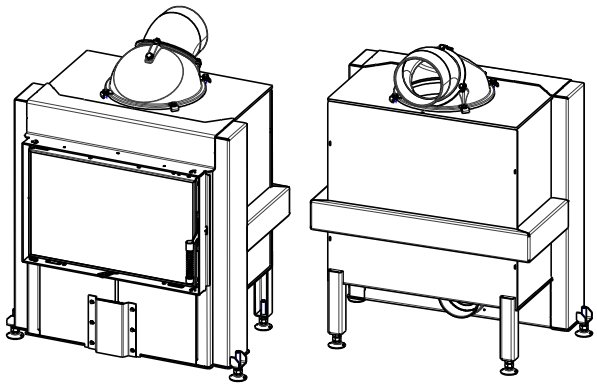

(A) Zastavbovy rozmer / Baumaße / In-built dimension
(C) Centralni privod vzduchu / Central air inlet / Zentralluftzufuhr

Rozmery v mm
Maße in mm
Dimensions in mm

Dynamic 3g 66.44.01 + D3 PR 200

234 kg

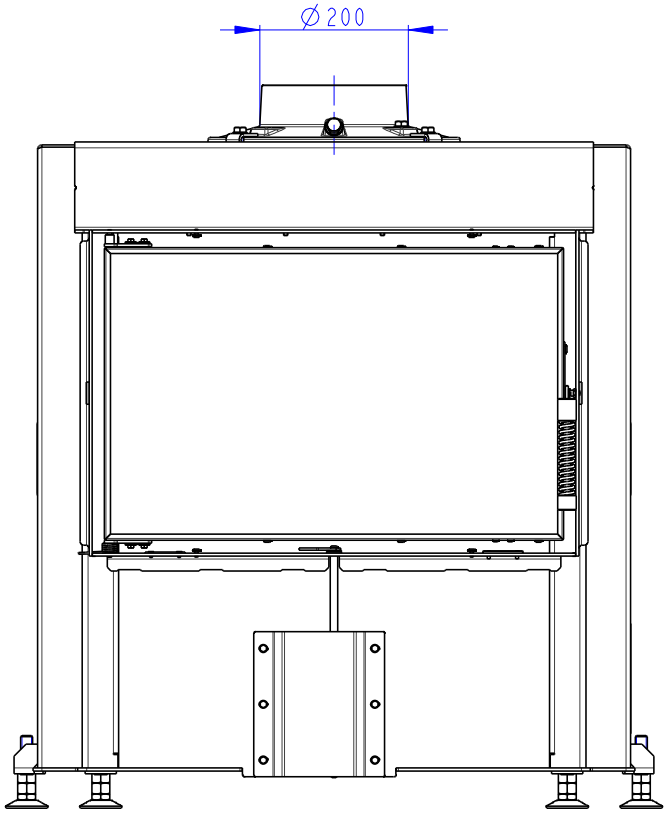

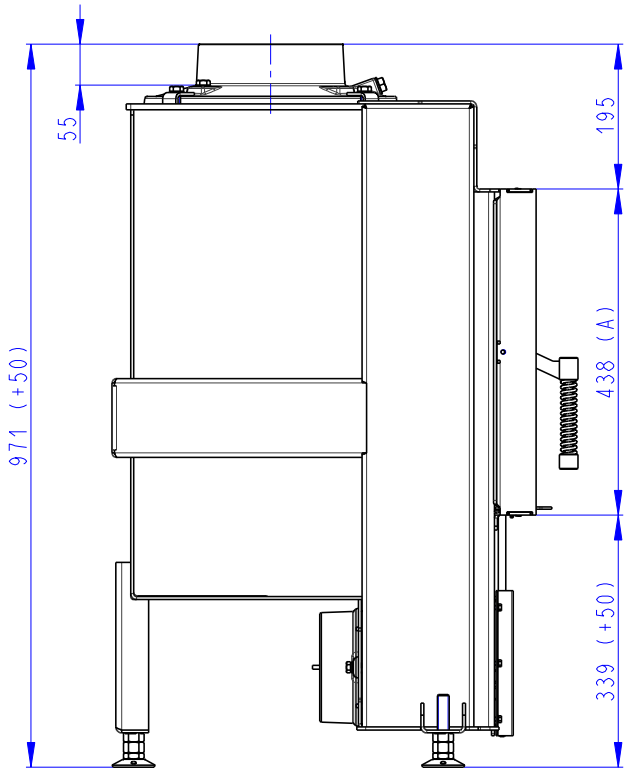

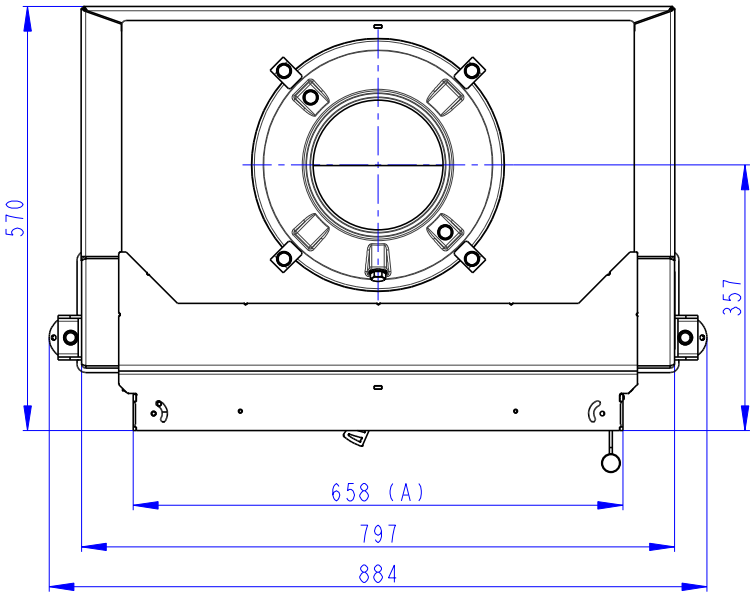

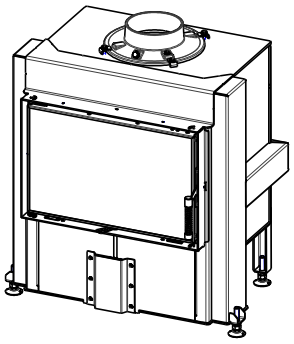

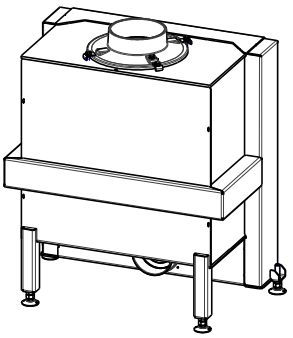

(A) Zastavbovy rozmer / Baumaße / In-built dimension
(C) Centralni privod vzduchu / Central air inlet / Zentralluftzufuhr

Rozmery v mm
Maße in mm
Dimensions in mm

Dynamic 3g 66.44.01 + D3 PR 200 + AKKUM KV 08B

540 kg

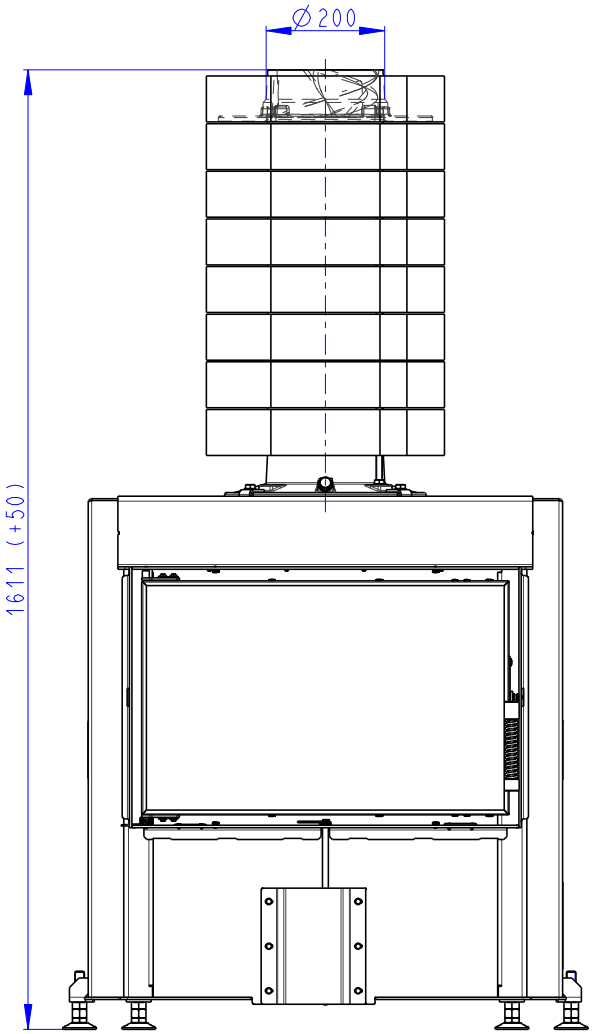

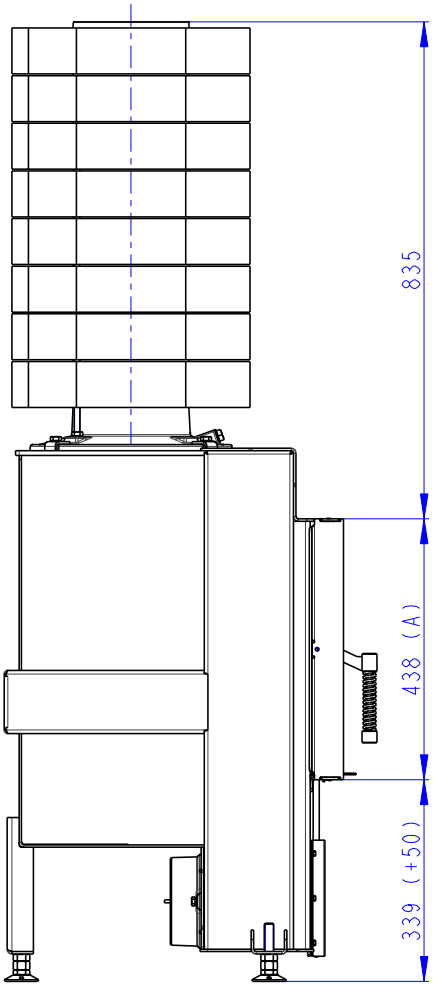

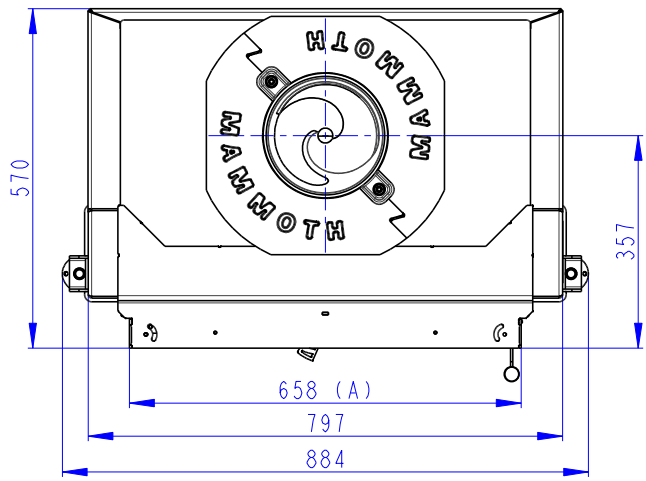

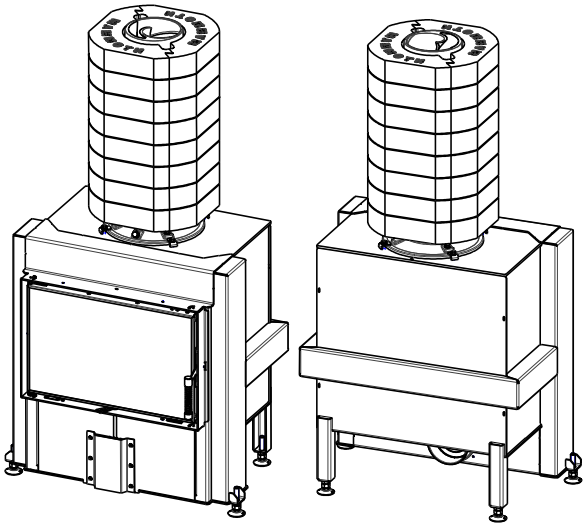

(A) Zastavbovy rozmer / Baumaße / In-built dimension
(C) Centralni privod vzduchu / Central air inlet / Zentralluftzufuhr

Rozmery v mm
Maße in mm
Dimensions in mm

Dynamic 3g 66.44.01 + D3 VY01

269 kg

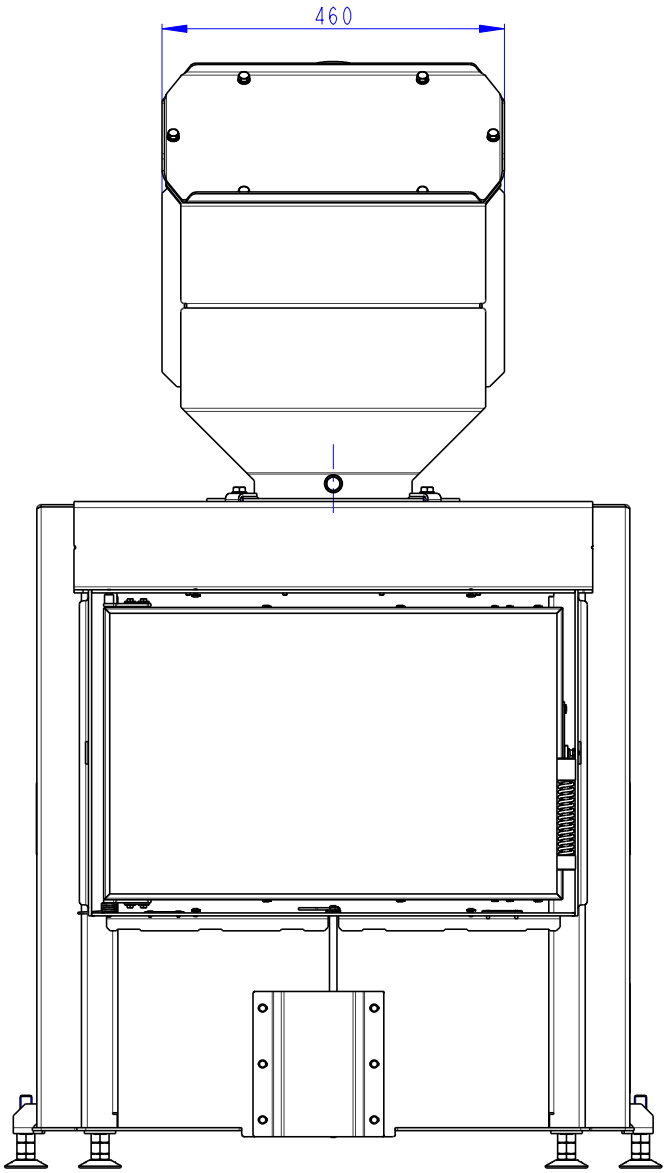

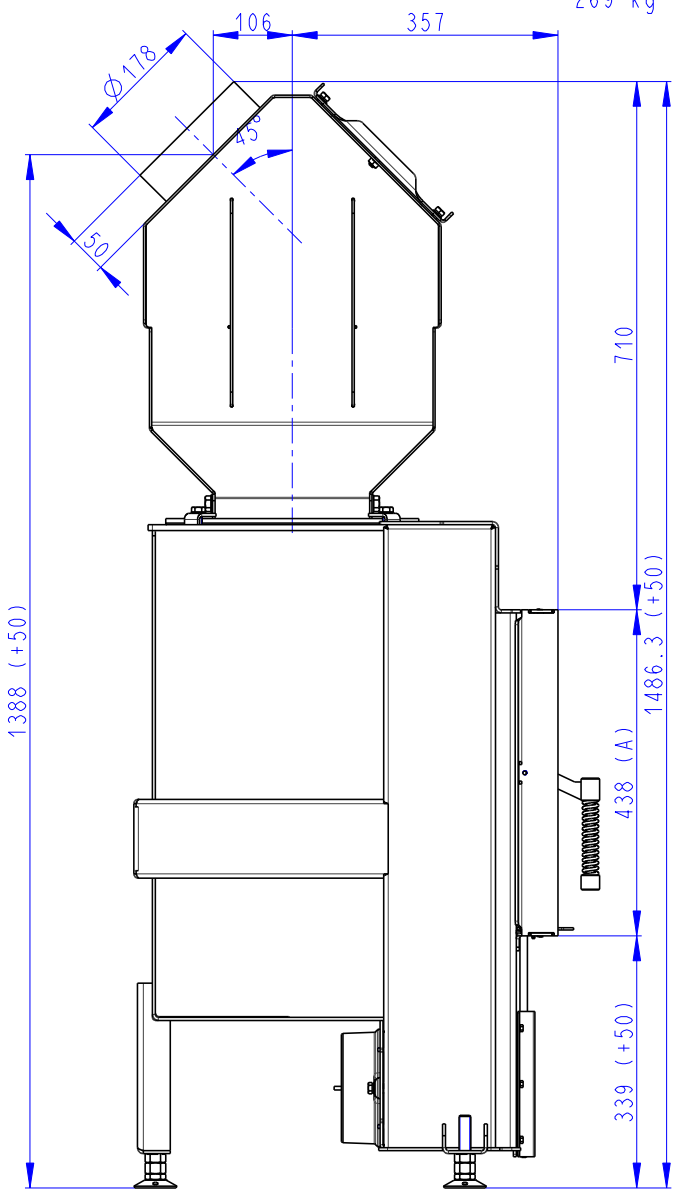

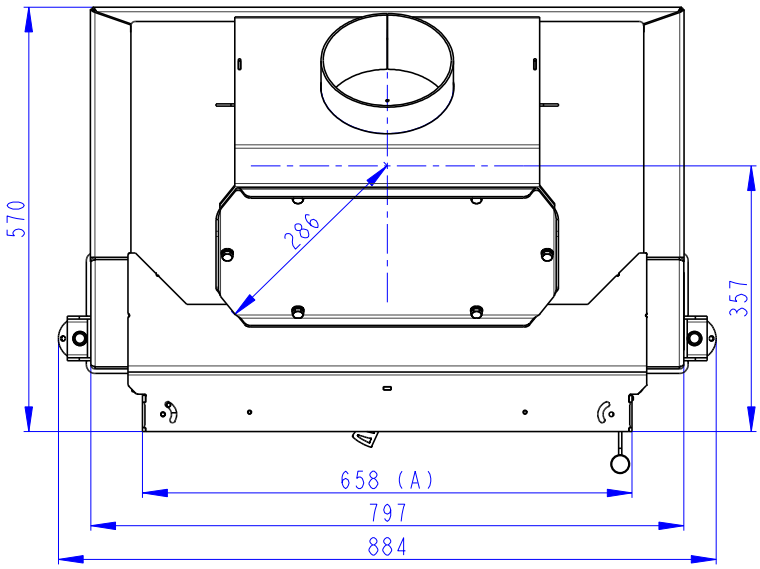

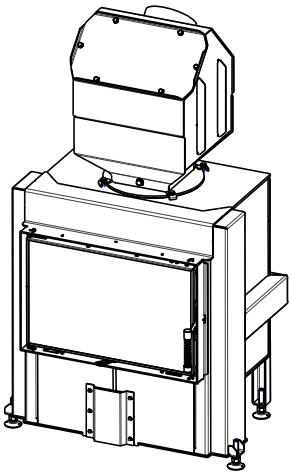

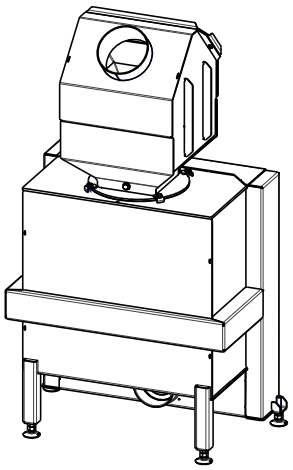

(A) Zastavbovy rozmer / Baumaße / In-built dimension
(C) Centralni privod vzduchu / Central air inlet / Zentralluftzufuhr

Rozmery v mm
Maße in mm
Dimensions in mm

Dynamic 3g 66.44.01 + D3H RAM 04

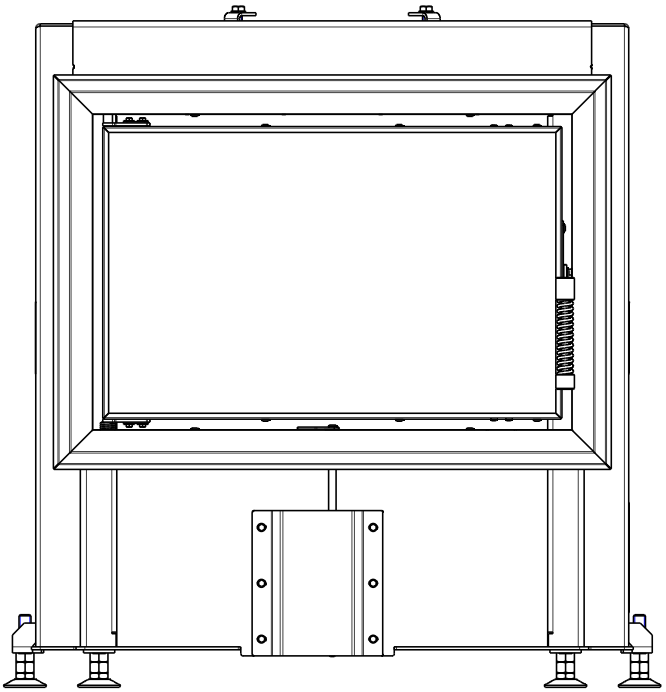

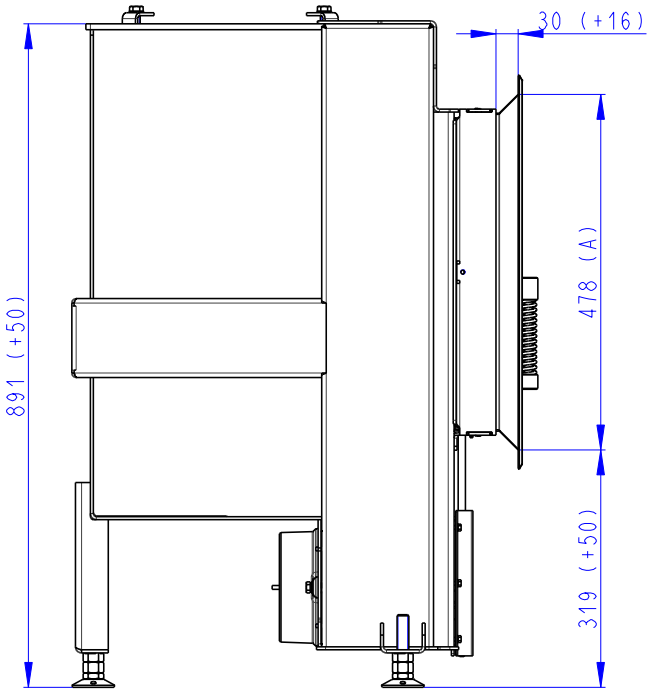

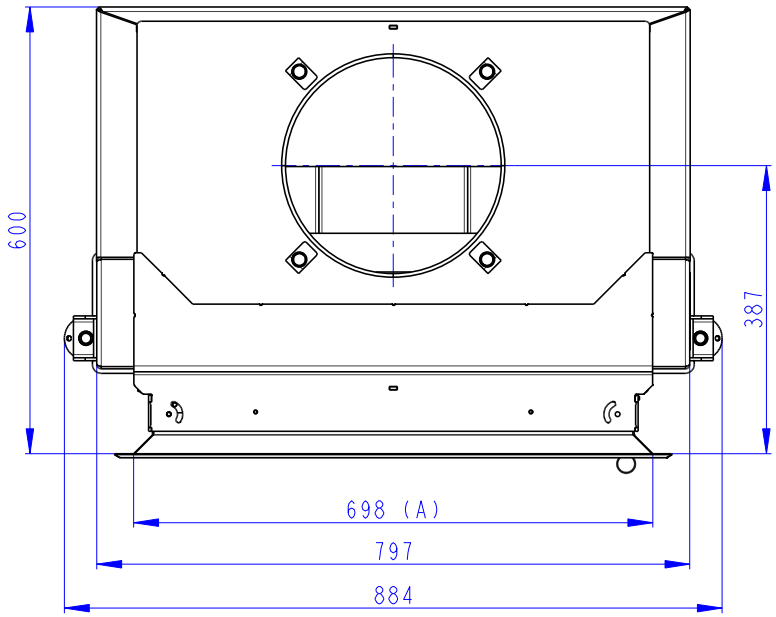

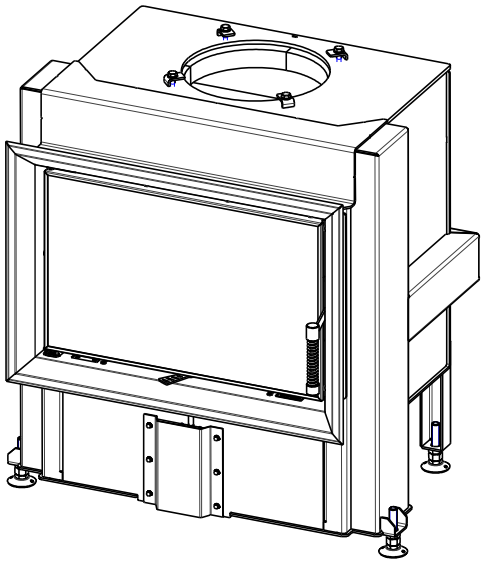

(A) Zastavbovy rozmer / Baumaße / In-built dimension
(C) Centralni privod vzduchu / Central air inlet / Zentralluftzufuhr

Rozmery v mm
Maße in mm
Dimensions in mm

Dynamic 3g 66.44.01 + D3H RAM 06

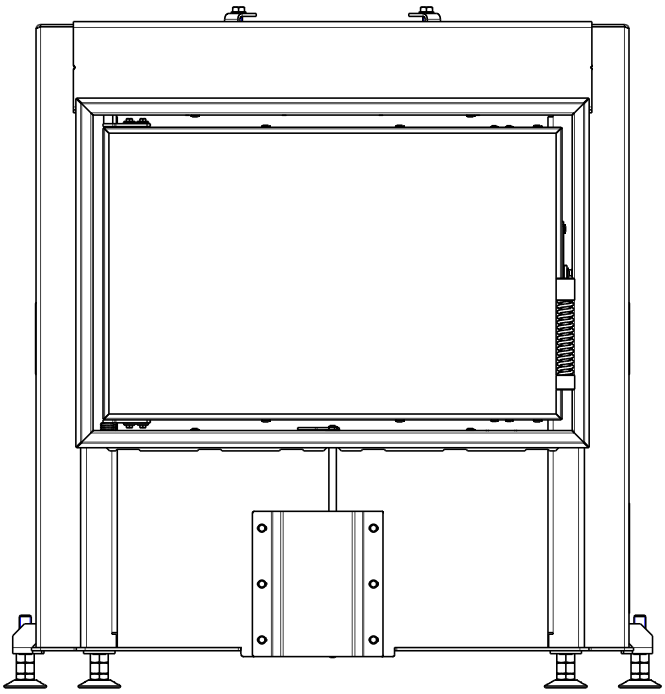

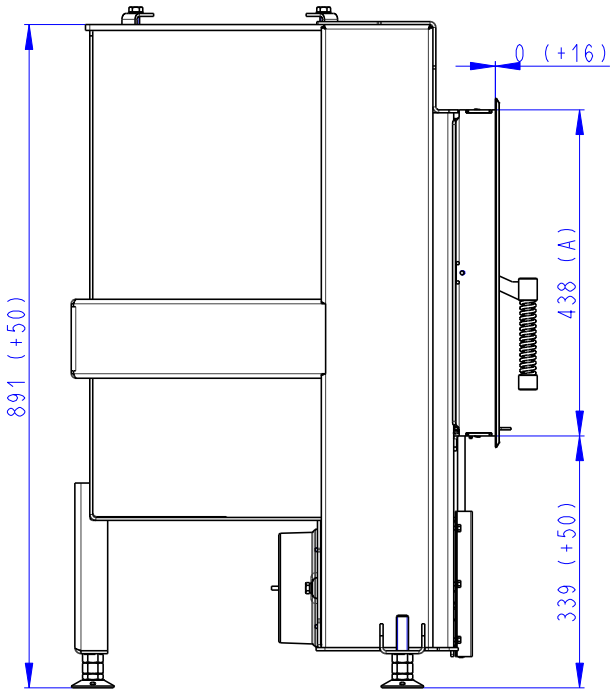

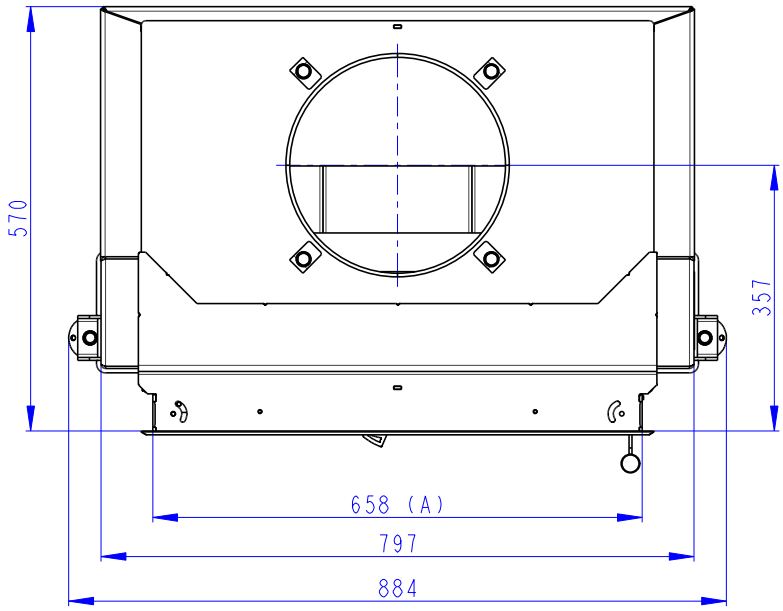

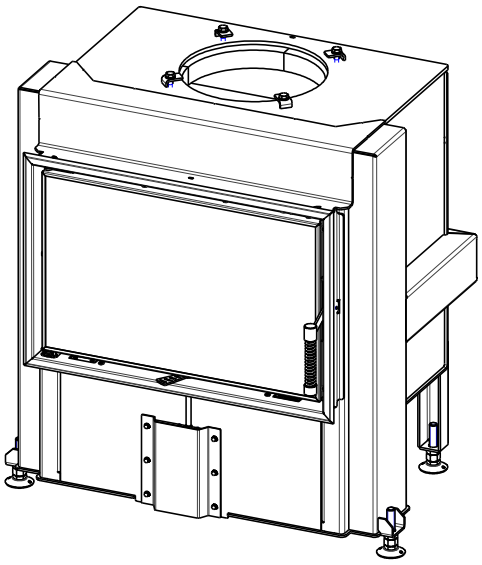

(A) Zastavbovy rozmer / Baumaße / In-built dimension
(C) Centralni privod vzduchu / Central air inlet / Zentralluftzufuhr